Brilliant
THE JEWEL IN LIGHTING

Torres
93615...
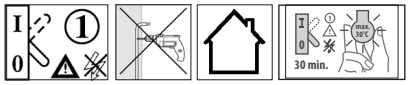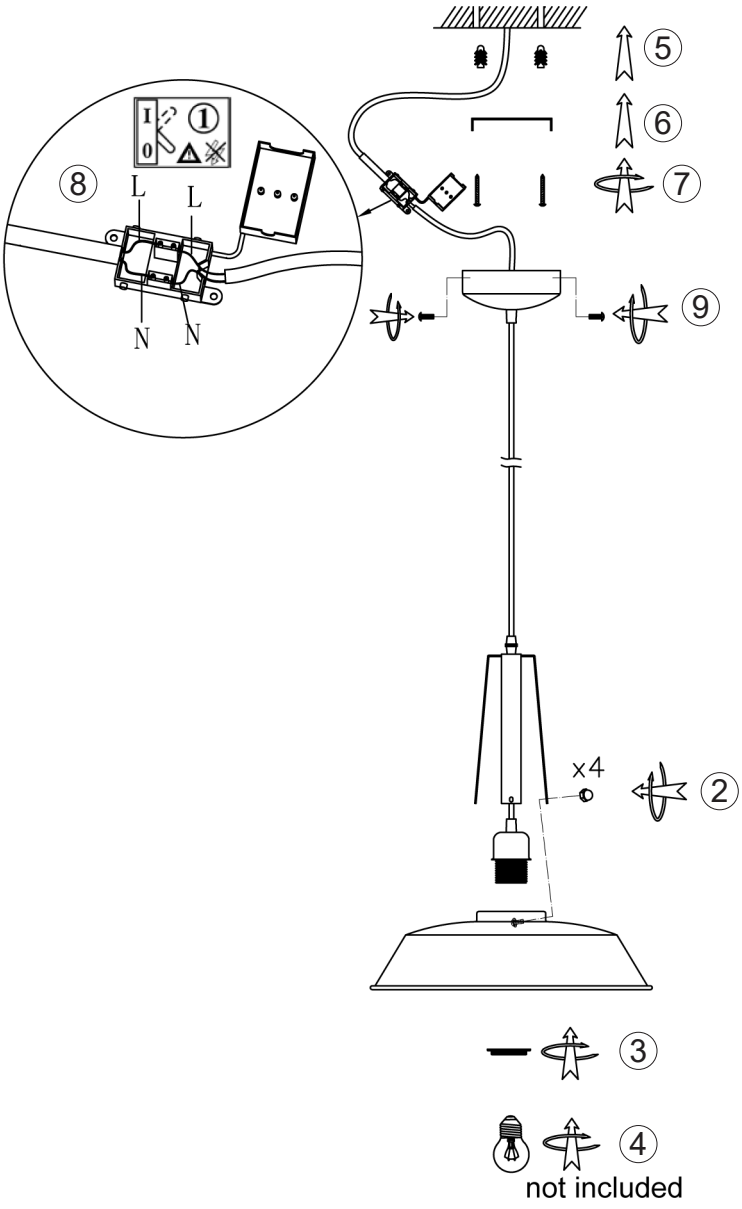
05.16